SETIT 2005
3rd International Conference: **S**ciences of **E**lectronic, **T**echnologies of **I**nformation and **T**elecommunications
March 27-31, 2005 – TUNISIA

A New Approach Reliability Based for the Design of Hybrid Expert Systems in Industrial Diagnosis Field

Toufik Bentrcia, Leila Hayet Mouss, Mohamed Djamel Mouss

Automatic and Productic Laboratory
Industrial Engineering Department, University of Batna,
Rue Chahid Med. El. Hadi Boukhlouf, 05000 Batna, Algeria.

Abstract: Now days, automated factories are ushering a new era of industrial revolution, such factories are becoming more complicated and as a result more difficult for diagnosis operations. The advent of hybrid diagnosis systems in recent years, has allowed the overcoming of some challenging problems related to the application of systems based on a unique model.
This paper presents an approach based on reliability methods for the design of hybrid expert systems, which are a new trend in industrial diagnosis systems. First, we introduce some aspects of diagnosis problem complexity in industrial field, and then we present some of the well-known specifications and advantages of hybrid expert systems. Finally, a reliability based approach for the design of such systems is proposed and applied to a milk production unit.

1 Introduction

We have seen an explosive growth in the degree of automation for production systems during recent years, which has brought us to the doorstep of another industrial revolution, that is characterized by a high integration of heterogeneous dedicated equipments (electrical drives, sensors, microcomputer control systems,…etc) in order to accomplish fixed goals. The principle motivation of this automation is improvement of productivity, quality and minimization of less predictable human elements and costs, and these motives in turn are being inspired by international competition [1].
In spite of many obvious advantages resulting from such automation, the state structure of the production process has become much complicated, because of multi-variability and non-linearity phenomena [2]. Moreover, when it is combined with high investment costs, it forces industrialists to maintain the highest possible service quality of different functionalities. The efficient and accurate supervision of technical processes requires information processing at various levels [3], each level having its own knowledge base and evaluation technique. At the first stages, process or signal models are used to identify process or signal parameters. If the signals or parameters exceed one of the thresholds that limit the allowed range, then this is considered as a symptom of a process fault. The problem of industrial diagnosis consists of determining the most probable cause of a failure based on occurred symptoms.
The sophisticated problem-solving systems, called expert systems have already been and are likely to be used in diagnosis field; their popularity can be partially explained by the following advantages [4]:

- Modularity of the knowledge and, therefore, better extensibility of the system.
- Naturalness in the expression of knowledge.
- Introspection, i.e. possibility for an expert system to check its own consistency.
- Transparency, i.e. the user is able to see the knowledge used by the system and also to trace back the successive steps of reasoning.
- Transfer of knowledge to human: an expert system can become a teacher by explaining its behavior.

Our essential aim in this article is to expose, using reliability methods, the elaboration of a design procedure for hybrid expert systems. First, we give some aspects of diagnosis problem complexity in the industrial field, after that, we review the characteristics of hybrid expert systems. Finally we present a reliability-based approach for the design of such systems and implement the proposed approach by applying it to a milk production unit.

2 Industrial diagnosis problem complexity

"Industrial diagnosis can be defined as the identification of the most probably cause of a failure with the help of a logic reasoning based on information provided by an inspection, a control or a test" [5]. This definition leads us to the principal tasks of diagnosis:

a. Observing failure symptoms.
b. Identifying the failure cause with the help of a logic reasoning based on observations.

One of the many trends proposed in industrial diagnosis models consists in mathematical formulation, so it can be reduced to an inverse resolution problem between the cause and its effect, expressed as a deterministic relation given by the model of Figure 1. [6], where we consider the space of unknown parameters (all causes) *X* and the space of observed quantities (all symptoms) Y.

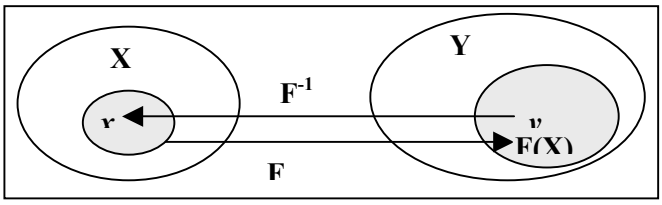

Figure. 1. Relations between Causes Space and Symptoms Space.

The model is equivalent to the mapping relation:

F: X (space of causes) ⟶ **Y**(space of symptoms)
x ⟶ **y**

The studied problem consists of determining the solution x for y by using the relation F, we have: $F(x) = y$. The obvious solution is: $x = F^{-1}(y)$.
Unfortunately, the physical nature of industrial plants prohibits the use of such a scheme. Tikhonov in his work in [7] has presented conditions under which a problem is well expressed:

- Existence of solution for each y belong to Y.
- Uniqueness of solution x in X
- Continuity of solution $x(y)$.

A problem is badly expressed if it doesn't satisfy one of the previous conditions for the following reasons:

- Noisy experimental data: signals received from sensors are in a perturbed industrial environment which contains parasite information, any used signal x has tow components: x_d and x_s. x_d corresponds to the deterministic component of the signal whereas x_s corresponds to the stochastic component that is the result of the contribution of all internal and external noises in the industrial environment. Fault diagnosis based upon noisy instrument readings is a difficult problem [8].
- Modeling error: because of the wide diversity of existing methods in diagnosis field and the lack of information about some specific problems, using an appropriate method for modeling the problem can lead to modeling errors that results in aberrant solutions [2].
- Inadequate choice of topologies: false choice of topologies for causes space and symptoms space can be the source of data loss or incoherence of the decision function [6].
- Diverse sources of knowledge: features selection and extraction of the optimal subset of data that determines faults needs trying all possible combinations which results in high computational complexity [9].

3. Hybrid expert systems

Actually, a great number of diagnostic methods were developed, each category of methods is suitable for an application in a specific situation and depends also on the nature of data available regarding the problem in study, the three main categories are shown in Figure 2, [2].

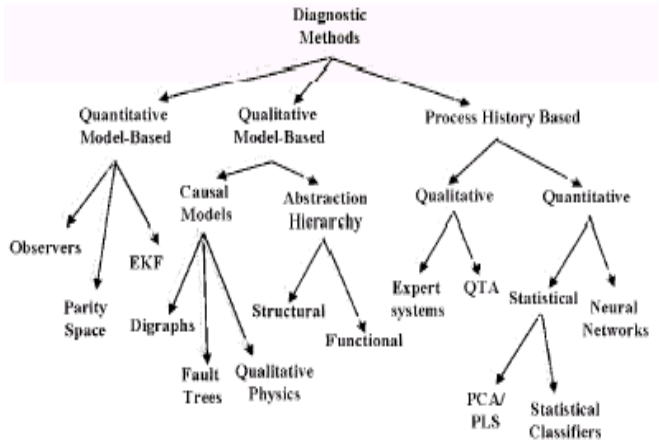

Figure. 2. Classification of Different Diagnostic Methods.

One of the important results obtained in [10] is that no single method is adequate to handle all the requirements for a diagnostic system. Though all the methods are restricted, in the sense that they are only as good as the quality of information provided, it was shown that some methods might better suit the knowledge available than others. It is clear that some of these methods can complement one another resulting in better diagnostic systems. Integrating these complementary features is one way to develop hybrid methods that could overcome the limitations of individual solution strategies. Hence, hybrid approaches, where different methods work in conjunction to solve parts of the problem are attractive.
The integration of symbolic and neural computation is actively pursued in Artificial Intelligence and Cognitive Science. Various paths to neurosymbolic integration are being explored, and attempts to provide a comprehensive taxonomy have been recently made.
The opportunity of employing neural techniques in expert systems is often suggested on the ground that the learning, generalization, fault and noise tolerance capacities of neural networks can alleviate well-known shortcomings of symbolic problem solvers, such as brittleness in front of incomplete or noisy data, no increase in performance with experience, and time-consuming knowledge acquisition. However, it is emphasized that this fairly standard motivation for neurosymbolic integration is to be amended in significant ways: the capability of carrying out stepwise inferential processes, providing intelligible justifications for suggested solutions, validating large knowledge bases all of which are crucial demands for expert systems are difficult to meet when the usual knowledge engineering techniques are replaced by neural training procedures. These critical remarks on the purported benefits of neural nets for automatic knowledge acquisition and robust problem solving are counterbalanced by the exploration of other motives of interest for combining rule-based and neural computations in expert systems [11].
(i) Automatic data acquisition for expert systems may require kinds of sensory processing that are effectively dealt with by neural nets. In turn, hypothetical reasoning is often called for interpreting and classifying (potentially ambiguous) sensory inputs. Thus, adaptive neural nets detecting perceptual clues and rule-based computations performing interpretative reasoning can fruitfully cooperate in this area.

(ii) By "reversing" the neural computations applied in classification tasks, one may obtain instances of the classes that neural nets were trained to classify. In this way, the sensory information fed into neural networks during the training phase can be exploited to provide *pictorial* or, more generally, non-symbolic forms of explanation in expert systems.
(iii) One can specify neurally inspired, parallel processing models for propositional rule systems where each neural unit represents a literal appearing in the rules (on the basis of a "localist" semantic assignment) or contributes to controlling rule firing. These models have a definite interest from a practical point of view: present-day technology makes their efficient and low-cost hardware implementation possible.
(iv) The hardware implementation of parallel processing models of propositional rule systems can make difference when expert systems are required to take very fast decisions in traffic light control, for instance, or in power plant failure detection and diagnosis.

4 A reliability based proposed approach

The essential aim of this approach is to establish a structured methodology that permits extraction of the optimal pertinent knowledge needed for fault diagnosis. Therefore, making a clear discrimination between the causes space and symptoms space so that the diagnosis problem would be very close to the mathematical model presented in Figure 1, finally exposes to diagnostic applications developers a simplified predicates based model that reflects the functional process structure and on other hand which can easily be implemented into a hybrid expert system. The proposed approach is organized as shown in Figure 3:

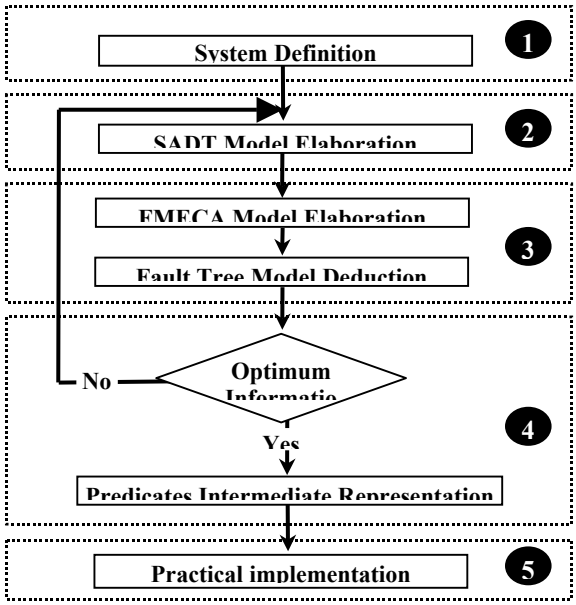

Figure. 3. Different Phases of the Proposed Approach

4.1 system definition

System definition consists of establishing the frontiers that separate between the studied system and its environment, this can help in avoiding the introduction of external elements in the analysis, which leads to negative effects on the system's modeling.

4.2 functional analysis

Functional analysis is based on modeling knowledge about process through the development of functional abstraction hierarchies [12], it permits the establishment of functional relations for a system in rational and comprehensible way.
Douglas Ross proposed in the mid-'70s the structured analysis and design technique (SADT) as a "language for communicating ideas". The technique was used by Softech, a Boston based software company, in order to specify requirements for software systems [13], it's also used for the analysis and design of vast/complicated systems. SADT model is constructed from boxes and arrows, boxes represent the decomposition of the system into subsystems, arrows relate boxes and codify interfaces and constraints between boxes [14].

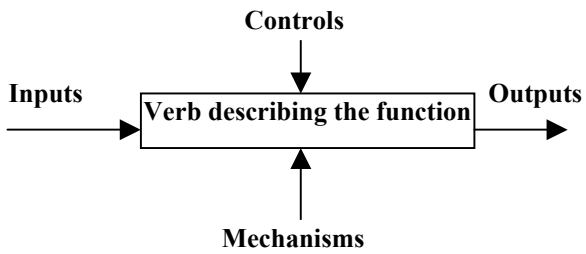

Figure. 4. Principal Elements of an SADT Model

The edges of each box have a particular signification, input data are transformed into output data by the function represented in the box. Control affects the manner in which a function is realized and mechanisms indicate supports of the function, as presented in figure 4.

4.3 Dysfunctional analysis

Dysfunctional analysis permits the representation of all faults and failures (their combination too) of a system's components.

4.3.1 FMECA model elaboration

Failure Mode, Effects and criticality Analysis is widely used in system studies related to safety and reliability field, it takes into account all faults and analyzes their consequences on the functionalities of a system [6], so that sensible materials could be determined easily.
Results obtained from an FMECA are grouped in a worksheet that resumes components fault effects on functions realized by elements of the system, it's an extension of FMEA method [15]. The Cotenants of a worksheet differs from an application field to another, however common information are present in all cases such as detection methods, appearance probability and failure effects [6].

4.3.2 fault tree model deduction

Fault trees have become a well-established method. They were originally developed at bell telephone laboratories in 1961 [12]. In a fault tree we have many layers of nodes that expose predictable events. These nodes are related by logical operators (AND, OR, NOT) [16]. The latter permit simulating the propagation of primary events or faults to higher levels till reaching the top of the chain so-called root of the fault tree. Before the construction of a fault tree we should possess a complete understanding of the system.
The most difficult problem with fault trees is that its development is prone to mistakes at different stages, the fault tree constructed is only as good as the mental model conceived by the developer [12]. To perform consistent diagnosis from fault trees, the trees must comprehensively represent the process causal relationship (explains all fault scenarios). There are no formal methods to verify the accuracy of the fault tree developed, for this reason, we have proposed an algorithm to deduce the fault tree directly from the previous obtained models (SADT, FMECA), the ideas from which this algorithm is inspired can be found in [17].

ALGORITHM
STEP1: Begin the root of the fault tree with the negation of initial activity (A_0) given in SADT model (level $k=1$).
STEP2: Place the negation of activities resulted from splitting initial activity at the next level (level $k=2$).

- If we have parallel redundancy in activities then there will be an AND operator between the root and nodes.
- If we have activities in sequential order then there will be an OR operator between the root and nodes.

STEP3: Obtain nodes at level $k+1$ connected to the nodes of level k by applying similar reasoning with step1 and step2.
STEP4: If there is no more nodes that can be extracted at level $k+1$ from SADT model then:
The last obtained nodes which refer to the malfunction of elementary activities in SADT model can be the result of a mechanism failure or a bad control caused by failure of the regulation loop for a specified parameter.
STEP5: Obtain nodes at level $k+2$ from FMECA model by connecting each node in level $k+1$ to nodes representing failures of components referring to mechanisms or regulation loops.
STEP6: Obtain leaves of the fault tree from the FMECA model by connecting each node in level $k+2$ to the corresponding causes of failures as given in FMECA worksheets.

4.4 predicates representation
In literature, we find a widespread utilization of predicates expressions in modeling a process status [3] and [18]. In our case we will not build the model from scratch, but we will try to exploit results obtained in the form of a tree fault diagram. Since the constructed fault tree describes causal relations in a user-friendly graphical formalism, its translation to predicates formulas will not be a hard task to realize. First we can identify tow types of predicates expressions in modeling a fault tree:

- Predicates expressions that define interfaces between nodes of tree in the form of logical operators (AND, OR), these predicates refers to the static aspects of the process.
- Predicate expressions that define failures events occurred at the leaves level of the tree, these predicates refer to the dynamical aspects of the process, the existence and the number of predicates expressions is variable with time because it depends on appearance of failures in elementary components.

The format of each type of predicates is as follows:

- The existence of an AND operator between nodes A and B is expressed by LINKAND(A,B).
- The existence of an OR operator between nodes A and B is expressed by LINKOR(A,B).

The propagation of failures from a lower node to parent node is given by:

- [LINKAND(A,x_1)^ LINKAND(A,x_2)^…^ LINKAND(A,x_i)] ^ [Failure(x_1) ^ Failure(x_2) ^…^Failure(x_i)]→Failure(A). (for AND operator).

- [LINKOR(A,x_1) ^ LINKOR(A,x_2) ^…^ LINKOR(A,x_i)] ^ [Failure(x_1) V Failure(x_2) V…V Failure(x_i)]→Failure(A). (for OR operator).

The fact which expresses the occurrence of a failure event at the lowest level of the tree is Failure(x_i).

4.5 practical implementation
Once we have reached this level we have in hand all requirements for the practical implementation of a hybrid expert system (neuro-symbolic expert system).
Facts knowledge base is initially empty, once a failure occurs the corresponding fact is generated as the output of a neural network and inserted in the facts knowledge base. Inputs of the neural network are features characterizing failures modes in the FMECA worksheets. The occurrence of a failure is interpreted as a discrepancy between the output value of the neural network at time t and the output value at time $t+1$.Therfore, the inference engine is launched to achieve a diagnosis operations and find not only faulty components which were the cause of the failure, but also predictable malfunctions because of the lag time separating an occurrence of a failure and its propagation to higher levels in the fault tree.

5 Application

As an example to illustrate the application of the proposed approach, we have chosen the system of milk reception in an agro-alimentary unit called AURES dairy.

5.1 system definition
The milk reception system is composed from two subsystems:
5.1.1 **Lorry reception line**: this subsystem is composed from the following elements:

- Tank
- Heat exchanger
- Centrifuge pump
- Plug
- Temperature regulation loop

- Sluice

Raw milk is pumped from the lorry cistern to the tank, when the milk is judged to be safe, the pump pumps milk to the heat exchanger, then milk is stored in the tank [19].

5.1.2 Can reception line: this subsystem is composed from the following elements with some elements common with the first subsystem:

- Emptier
- Basin
- Sluice
- Centrifuge pump
- Heat exchanger
- Temperature regulation loop
- Tank

Milk of accepted quality is transferred from cans to the basin, after the basin is evacuated, the milk passes through the heat exchanger to be finally stored in the tank.

Milk of low quality is pumped by resumption system to the tank for a new expedition [19].

The detailed structure of the studied system is shown in Figure. 5.

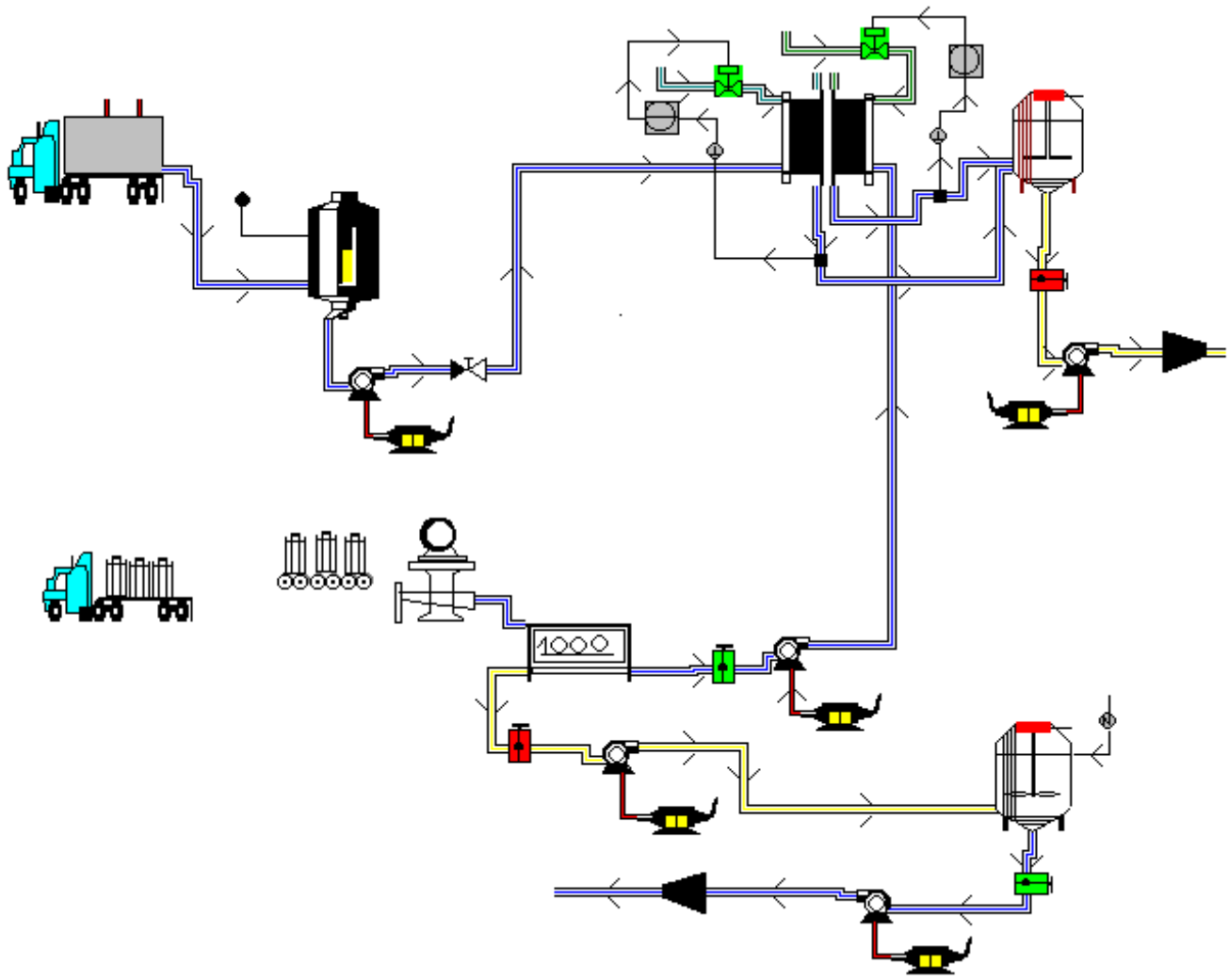

Figure. 5. The Structure of Milk Reception System in Production Unit.

5.2 functional analysis

Figures 6, 7, 8 describe the decomposition of the reception milk system to a functional relations by applying the SADT method.

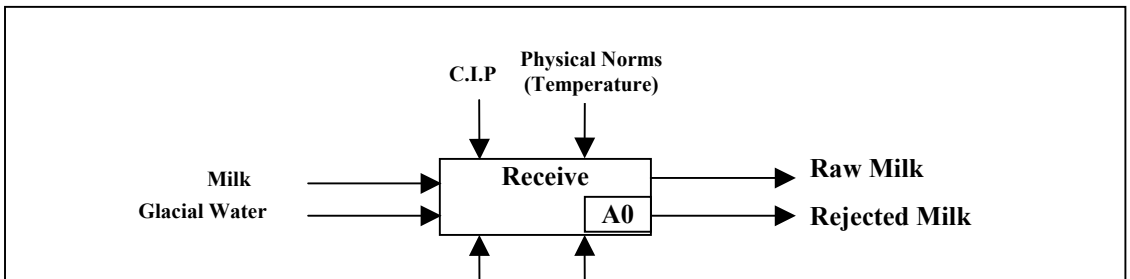

Figure. 6. A-0 Level Model for the Reception Milk System.

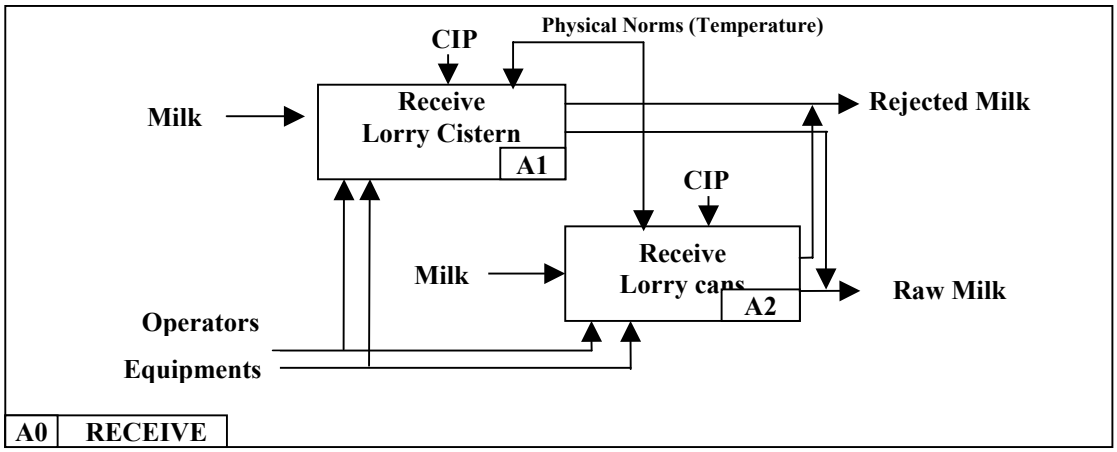

Figure. 7. A0 Level Model for the Reception Milk System.

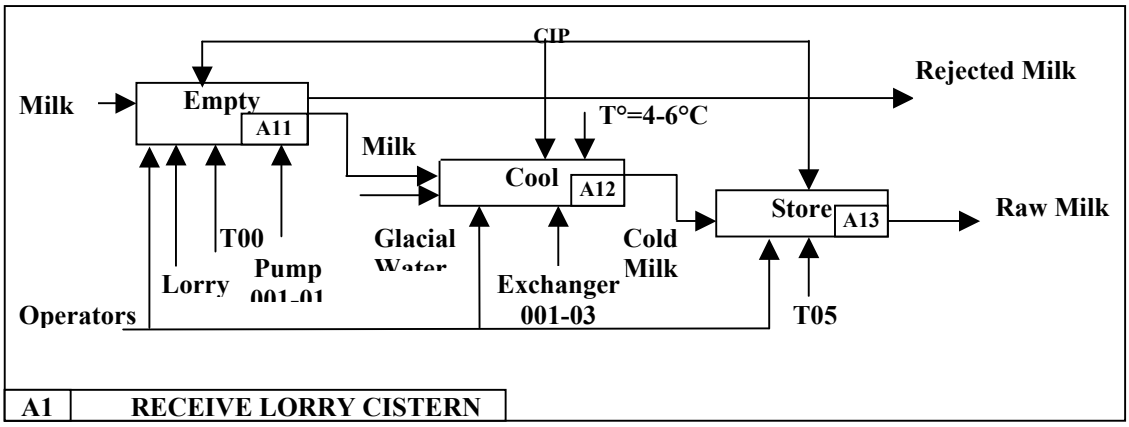

Figure. 8. A1 Level Model for the Reception Milk System.

5.3 Dysfunctional analysis

5.3.1 FMECA model elaboration

TABLE 1 FMECA WORKSHEET FOR THE TANK00 COMPONENT

N°	Component	Function	Fault modes	Causes	Effects on the system	Detection means	Criticality				Remedy
							F	G	N	C	
01	Tank00	Store milk obtained from the cistern	Overflow Leakage of the vat	P.D of the L.S.H Welding crack	Loss of received milk	visual	1 1	2 3	1 1	2 3	Change the LSH Repair the vat.

5.3.2 fault tree model deduction

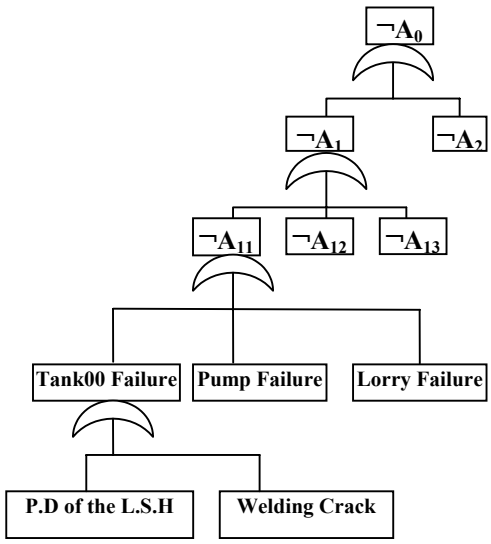

Figure. 9. The Deduced Fault Tree for the Selected Part of the Reception Milk System

All existing operators in the fault tree of figure 9, are OR operators because of the absence of physical redundancy in the production chain.

5.4 Predicates representation

The predicate expressions associated with the precedent fault tree are:

LINKOR($\neg A_0$, $\neg A_1$).

LINKOR($\neg A_0$, $\neg A_2$).

LINKOR($\neg A_1$, $\neg A_{11}$).

LINKOR($\neg A_1$, $\neg A_{12}$).

LINKOR($\neg A_1$, $\neg A_{13}$).

LINKOR($\neg A_{11}$, **Tank00 Failure**).

LINKOR($\neg A_{11}$, **Pump Failure**).

LINKOR($\neg A_{11}$, **Lorry Failure**).

LINKOR(**Tank00 Failure, P.D of the L.S.H**).

LINKOR(**Tank00 Failure, Welding crack**).

[LINKOR($\neg A_0$,$\neg A_1$)^LINKOR($\neg A_0$,$\neg A_2$)]^[Failure($\neg A_1$)V Failure(($\neg A_2$)]→Failure($\neg A_0$).

Similar predicates held for the resting nodes of the tree.

Facts of the form Failure(x_i) for the lowest level (leaves of the tree) are generated and inserted in the facts knowledge base dynamically with the occurrence of associated symptoms.

6 Concluding remarks

This paper has presented a structured methodology based on reliability methods for the design of hybrid expert systems. By utilizing these methods we can achieve better extraction and organization of information. The obtained optimal subset reflects, to an acceptable degree of accuracy, the dynamic state of the process. Predicates intermediate representation simplifies later implementation of the designed hybrid expert system.

Further research is conducted actually for using many valued logic predicates in order to support evolutionary states and not only normal and abnormal states. On the other hand, progress is made in implementing a prototype for the milk production unit using PROLOG and MATLAB to evaluate the performance of the proposed approach.

7 References

[1] B.K Bose, "Technology Trends in Microcomputer Control of Electrical Machines" *IEEE Transactions on Industrial Electronics,* Vol. 35, N° 1, February 1988, pp. 160-176.

[2] V. Venkatasubramanian et al, " A Review of Process Fault Detection and Diagnosis Part I: Quantitative Model-Based

[5] AFNOR, "Maintenance Industrielle ", *Recueil de Normes Françaises AFNOR*, AFNOR-UTE, 1988.

[6] G. Zwingelstein, " Diagnostic des Défaillances Théorie et Pratique pour les Systèmes Industriels ", Hermès edition, 1995.

[7] A. Tikhonov, V. Arsenine, "Méthodes de Résolution de Problèmes Mal Posés", Mir Edition, Moscou, 1976.

[8] S.I. Gallant, " A Connectionist Expert System Approach to Fault Diagnosis in the Presence of Noise and Redundancy ",

[3] S. Nold, "Knowledge Based Real Time Fault Diagnosis With Eftas " *IFAC fault detection, supervision and safety for technical processes,* Baden-Baden, Germany, 1991, pp. 403-408.

[4] J. P. Haton " Knowledge Based and Expert Systems in Industrial Applications "*IFAC Artificial Intelligence*, Leningrad. USSR, 1983, pp. 83-88.

Methods "*Computers and Chemical Engineering* , Vol 27 , 2003, pp. 293-311.

International Workshop on Artificial Intelligence for Industrial Applications, 1988, pp. 15-19.

[9] B. Dubuisson, "Diagnostic et Reconnaissance de Formes", Hermès Edition, 1990.

[10] V. Venkatasubramanian et al, " A Review of Process Fault Detection and Diagnosis Part III: Process history based methods"*Computers and Chemical Engineering* , Vol 27 , 2003, pp. 327-/346.

[11] E. Burattini, De Gregorio M., Tamburrini G. (1998), "Generating and Classifying Recall Images by Neurosymbolic Computation," *Proceedings of the Second European Conference on Cognitive Modelling*, Nottingham, UK, 1-4 April 1988.

[12] V. Venkatasubramanian et al, " A Review of Process Fault Detection and Diagnosis Part II: Qualitative models and search strategies"*Computers and Chemical Engineering* , Vol 27 , 2003, pp. 313-/326.

[13] J. Milopoulos, "Information Modeling in the Time of Revolution ", *Information System* 23 (3-4), June, 1998.

[14] I.G.L.Technology, "SADT un Langage pour Communiquer ", EYROLLES Edition, 1993.

[15] J. Barkai, " Automatic Generation of a Diagnostic Expert System from Failure Mode and Effects Analysis (FMEA) Information *", International Congress and Exposition* Detroit, USA, March 1-4, 1999, pp. 1-6.

[16] Y. Chuning, S, Dinghua, " Classification of Fault Trees and Algorithms of Fault Tree Aanalysis", *Microelectron. Reliab*, Vol 30, No. 5, pp. 891-895, 1990.

[17] A. Kusiak, "Engineering Design: Products, Processes, and Systems", Academic Press, San Diego, CA, 1999.

[18] J. Lunze, "A Method for Logic-Based Fault Diagnosis ", *IFAC fault detection, supervision and safety for technical processes,* Baden-Baden, Germany, 1991, pp. 337-342.

[19] ALFA-LAVAL Technical Manual for the AURES dairy.